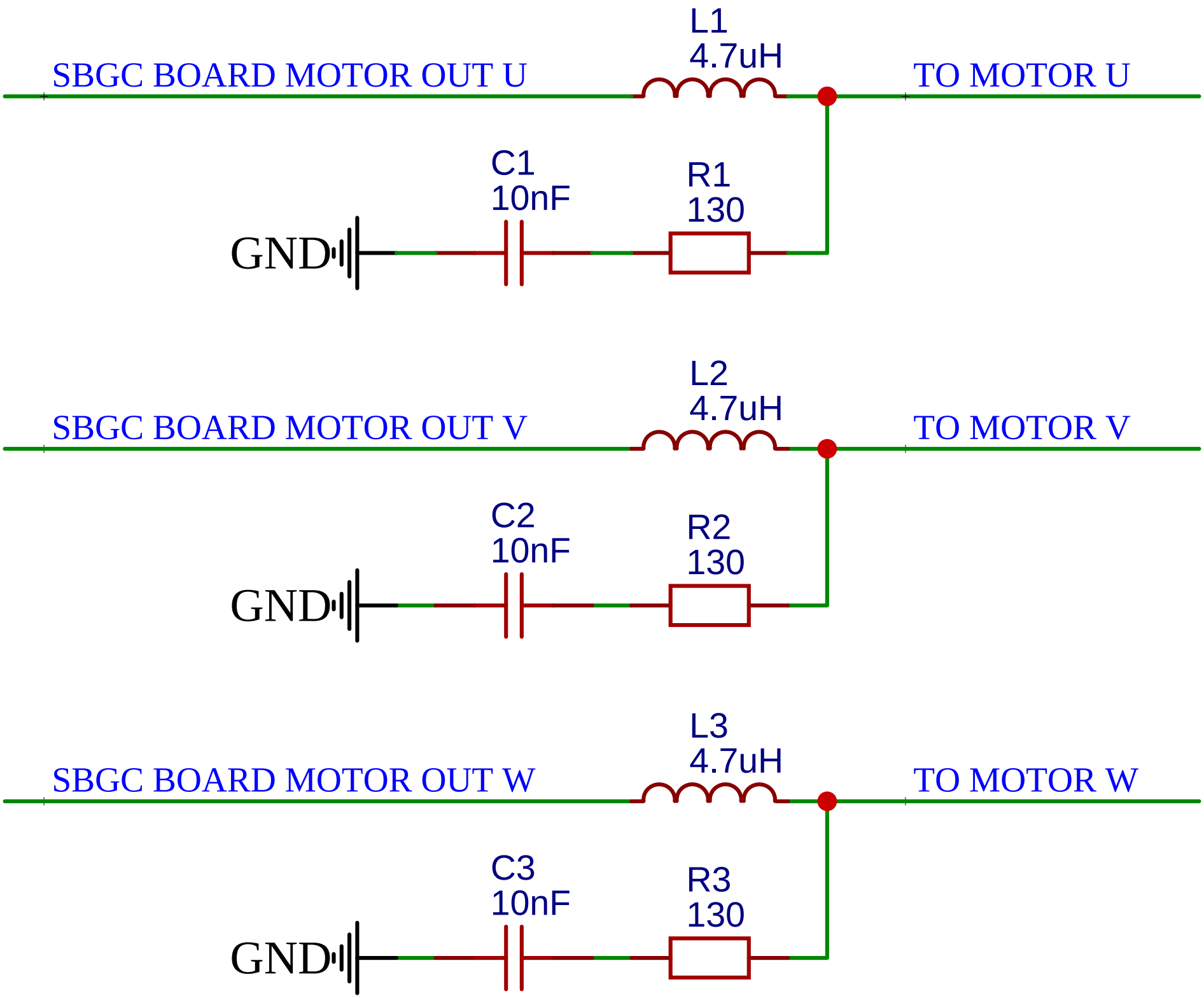
SBGC BOARD MOTOR OUT U
L1
4.7uH
TO MOTOR U
C1
10nF
R1
130
GND
SBGC BOARD MOTOR OUT V
L2
4.7uH
TO MOTOR V
C2
10nF
R2
130
GND
SBGC BOARD MOTOR OUT W
L3
4.7uH
TO MOTOR W
C3
10nF
R3
130
GND